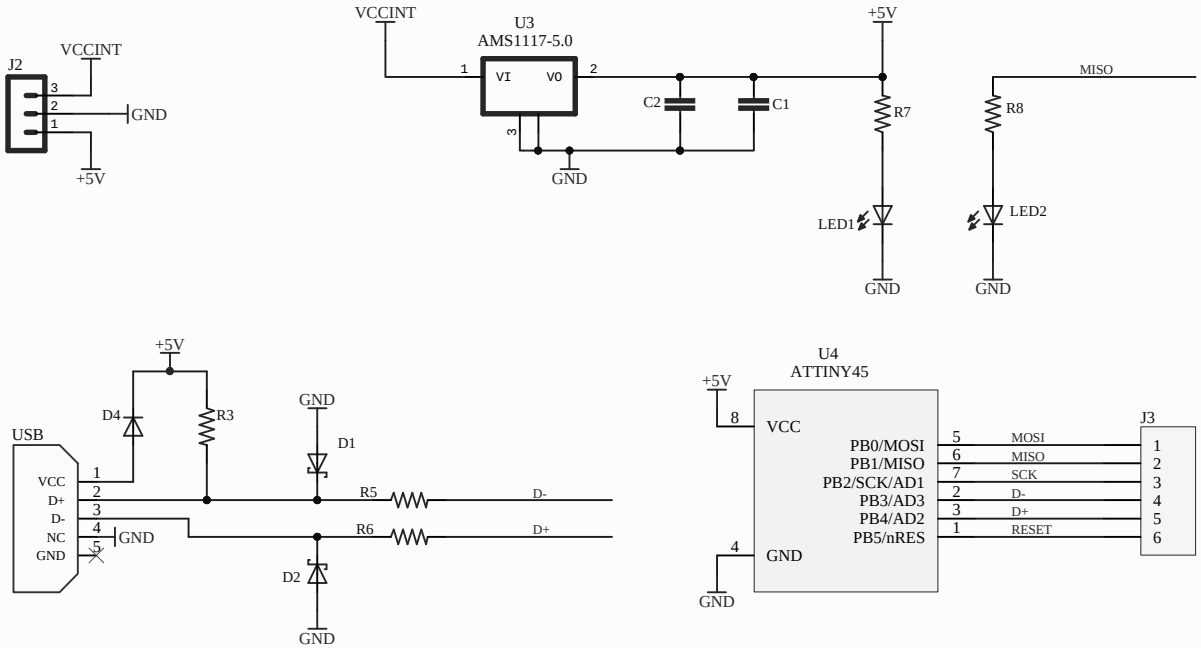

RobotDyn®
www.robotdyn.com

ATtiny85-USB-DS