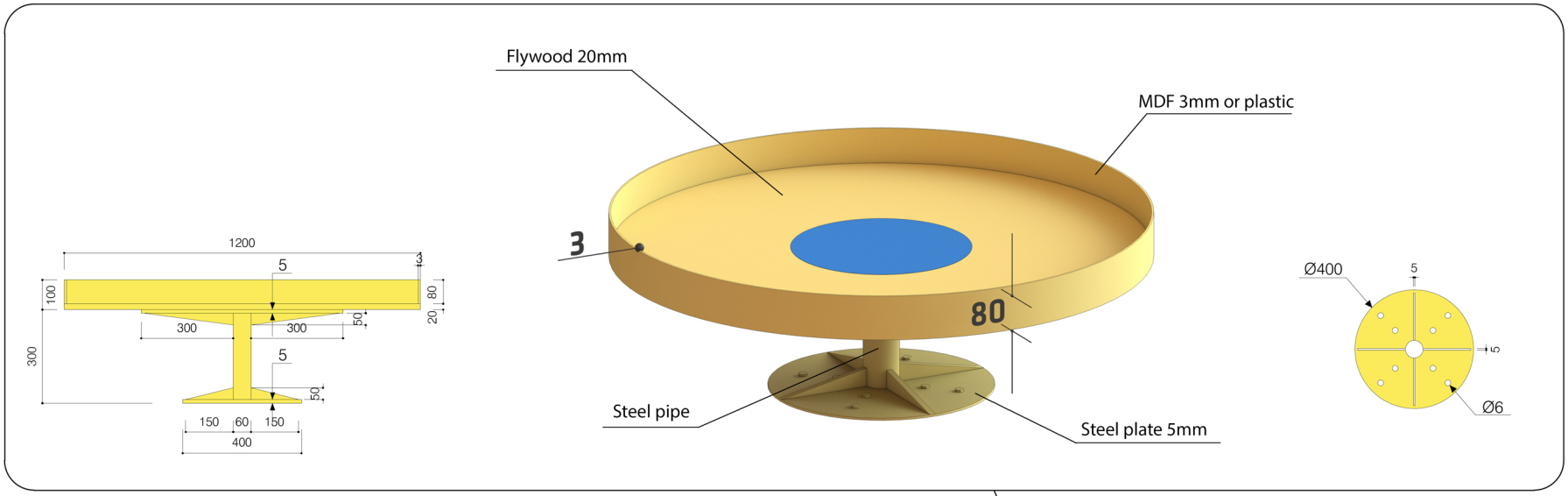

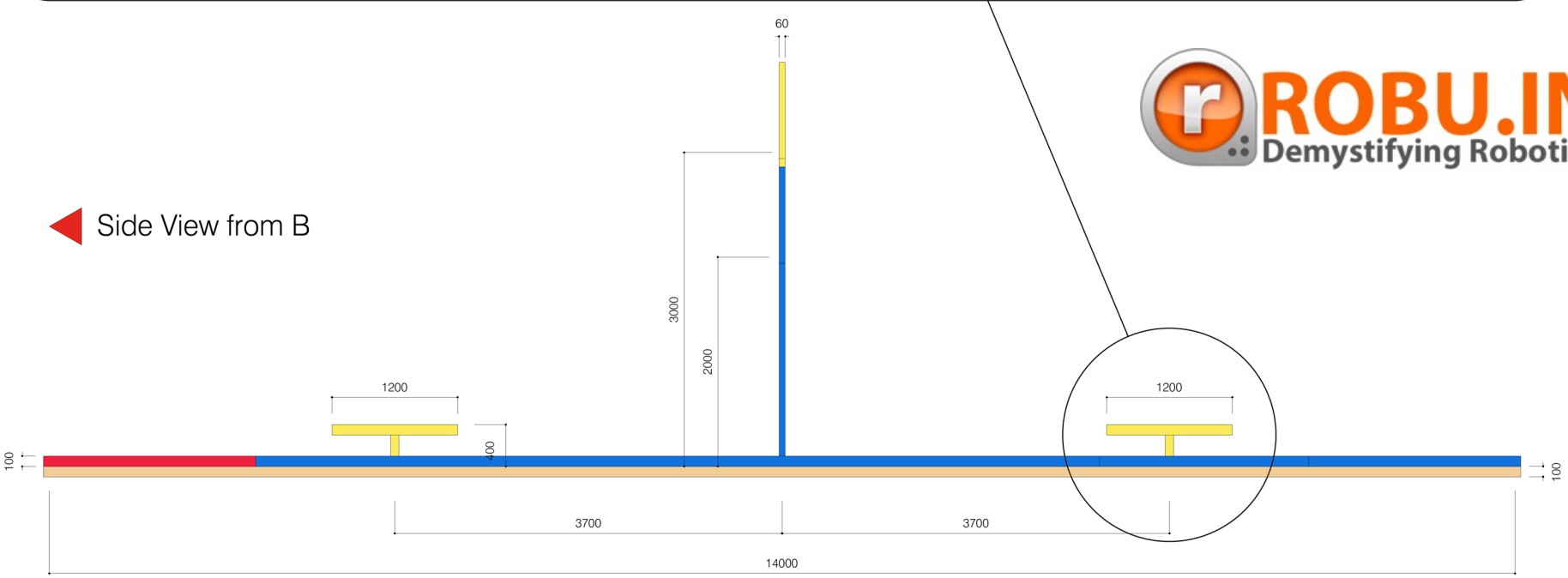

Project Title	Drawing Name	Date	Date		No.
ABU Asia-Pacific Robot Contest 2018 Ninh Binh - Vietnam	Figure 1.5 : Golden Cup	1 / 60 (A3)	2018.07.23	ABU Robocon 2018 Contest Committee	