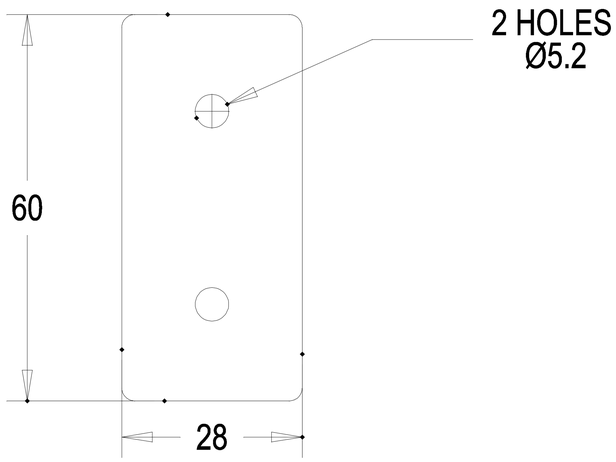

2H PLATE

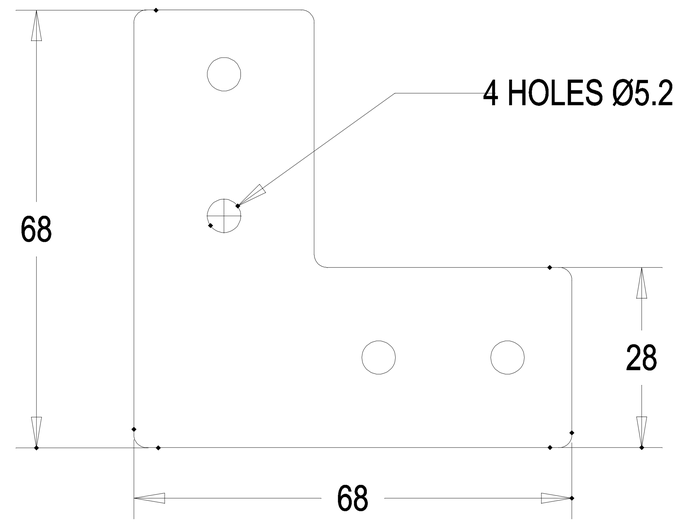

30X30 L PLATE

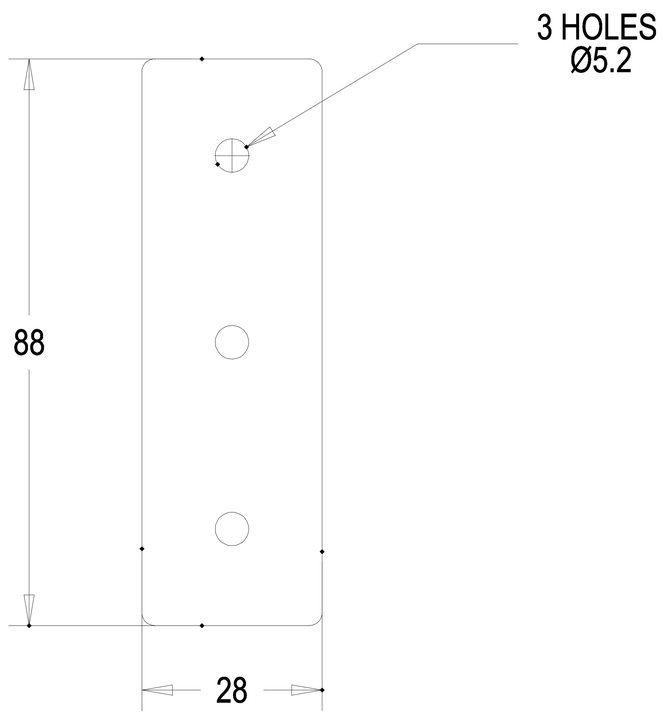

3H PLATE

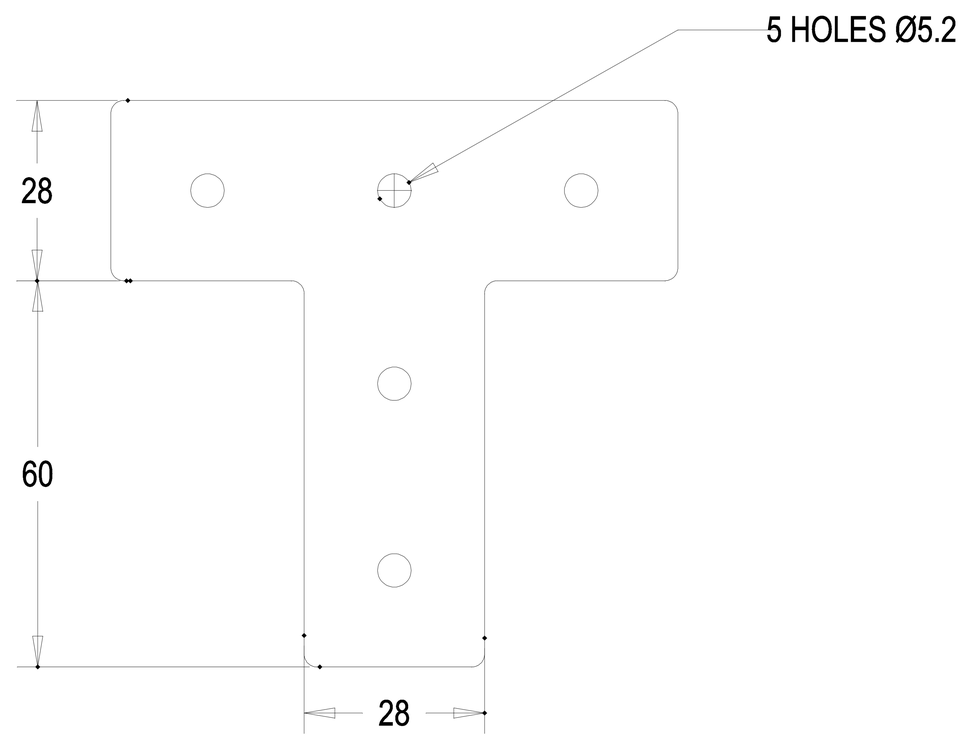

30X30 T PLATE

NOTE-DEPENDING ON THE MANUFACTURER,GIVEN DIMENSIONS MAY VARY IN THE RANGE+/- 5%

TITLE-30X30 ALUMINIUM EXTRUSION PLATES
SCALE 1:1 ROBU.IN
ALL DIMENSIONS ARE IN MM