MODBUS-RTU

Peristaltic Pump Driver Instructions

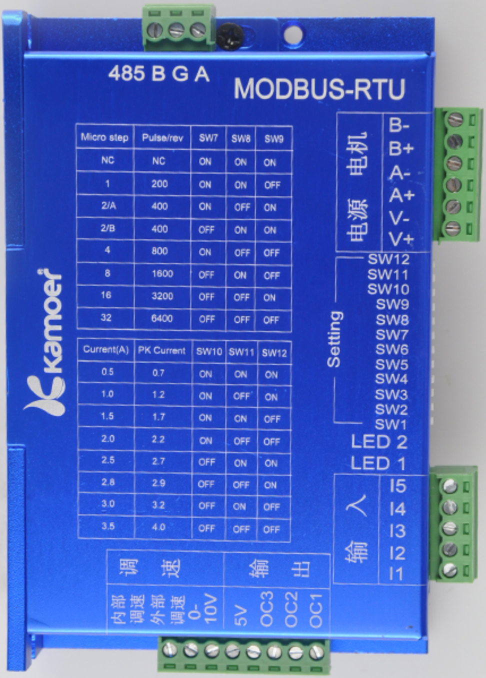
485 B G A
MODBUS-RTU
kamoer
电机
B-
B+
A-
A+
电源
V-
V+
Setting
SW12
SW11
SW10
SW9
SW8
SW7
SW6
SW5
SW4
SW3
SW2
SW1
LED 2
LED 1
输入
I5
I4
I3
I2
I1
调速
内部调速
外部调速
0-10V
输出
5V
OC3
OC2
OC1

Micro step	Pulse/rev	SW7	SW8	SW9
NC	NC	ON	ON	ON
1	200	ON	ON	OFF
2/A	400	ON	OFF	ON
2/B	400	OFF	ON	ON
4	800	ON	OFF	OFF
8	1600	OFF	ON	OFF
16	3200	OFF	OFF	ON
32	6400	OFF	OFF	OFF

Current(A)	PK Current	SW10	SW11	SW12
0.5	0.7	ON	ON	ON
1.0	1.2	ON	OFF	ON
1.5	1.7	ON	ON	OFF
2.0	2.2	ON	OFF	OFF
2.5	2.7	OFF	ON	ON
2.8	2.9	OFF	OFF	ON
3.0	3.2	OFF	ON	OFF
3.5	4.0	OFF	OFF	OFF

① PLC control

② Relay control

③ RS485 Communication control

④ Dry cut point (switch) control

一、Peristaltic Pump Driver - Trigger Control

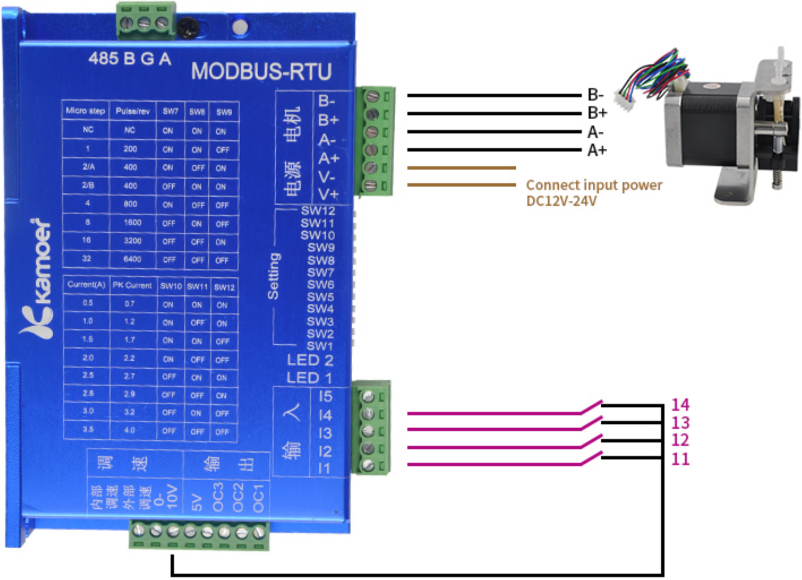
485 B G A
MODBUS-RTU
kamoer
电机
电源
B-
B+
A-
A+
V-
V+
Connect input power
DC12V-24V
Setting
SW12
SW11
SW10
SW9
SW8
SW7
SW6
SW5
SW4
SW3
SW2
SW1
LED 2
LED 1
输 入
I5
I4
I3
I2
I1
14
13
12
11
调 速
内部调速
外部调速
0-10V
输 出
5V
OC3
OC2
OC1

Micro step	Pulse/rev	SW7	SW8	SW9
NC	NC	ON	ON	ON
1	200	ON	ON	OFF
2/A	400	ON	OFF	ON
2/B	400	OFF	ON	ON
4	800	ON	OFF	OFF
8	1600	OFF	ON	OFF
16	3200	OFF	OFF	ON
32	6400	OFF	OFF	OFF

Current(A)	PK Current	SW10	SW11	SW12
0.5	0.7	ON	ON	ON
1.0	1.2	ON	OFF	ON
1.5	1.7	ON	ON	OFF
2.0	2.2	ON	OFF	OFF
2.5	2.7	OFF	ON	ON
2.8	2.9	OFF	OFF	ON
3.0	3.2	OFF	ON	OFF
3.5	4.0	OFF	OFF	OFF

Pic1 Built-in speed control knob control wiring diagram

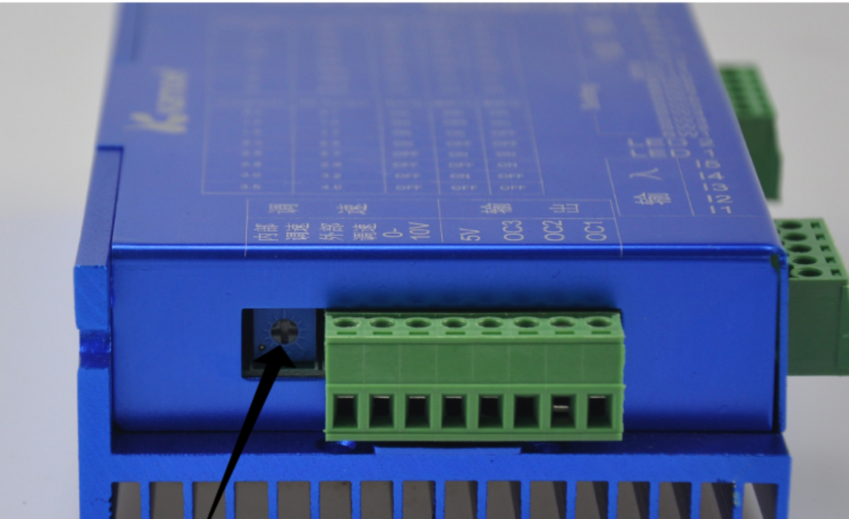
调 速
内部调速
外部调速
0-10V
输 出
5V
OC3
OC2
OC1
输 入

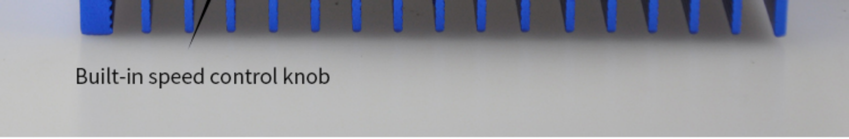
Built-in speed control knob

Pic2 Built-in speed control knob position diagram

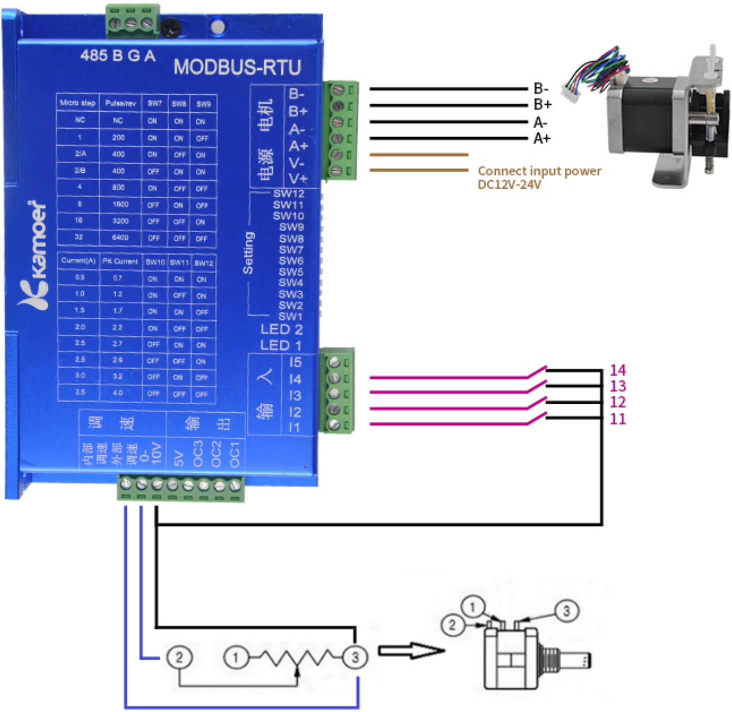

Micro step	Pulse/rev	SW7	SW8	SW9
NC	NC	ON	ON	ON
1	200	ON	ON	OFF
2/A	400	ON	OFF	ON
2/B	400	OFF	ON	ON
4	800	ON	OFF	OFF
8	1600	OFF	ON	OFF
16	3200	OFF	OFF	ON
32	6400	OFF	OFF	OFF

Current(A)	PK Current	SW10	SW11	SW12
0.5	0.7	ON	ON	ON
1.0	1.2	ON	OFF	ON
1.5	1.7	ON	ON	OFF
2.0	2.2	ON	OFF	OFF
2.5	2.7	OFF	ON	ON
2.8	2.9	OFF	OFF	ON
3.0	3.2	OFF	ON	OFF
3.5	4.0	OFF	OFF	OFF

485 B G A
MODBUS-RTU
kamoer
电机
电源
B-
B+
A-
A+
V-
V+
Setting
SW12
SW11
SW10
SW9
SW8
SW7
SW6
SW5
SW4
SW3
SW2
SW1
LED 2
LED 1
输入
I5
I4
I3
I2
I1
调速
输出
内部调速
外部调速
0-10V
5V
OC3
OC2
OC1
B-
B+
A-
A+
Connect input power
DC12V-24V
14
13
12
11
②
①
③
①
②
③

Pic3 External speed knob control wiring diagram

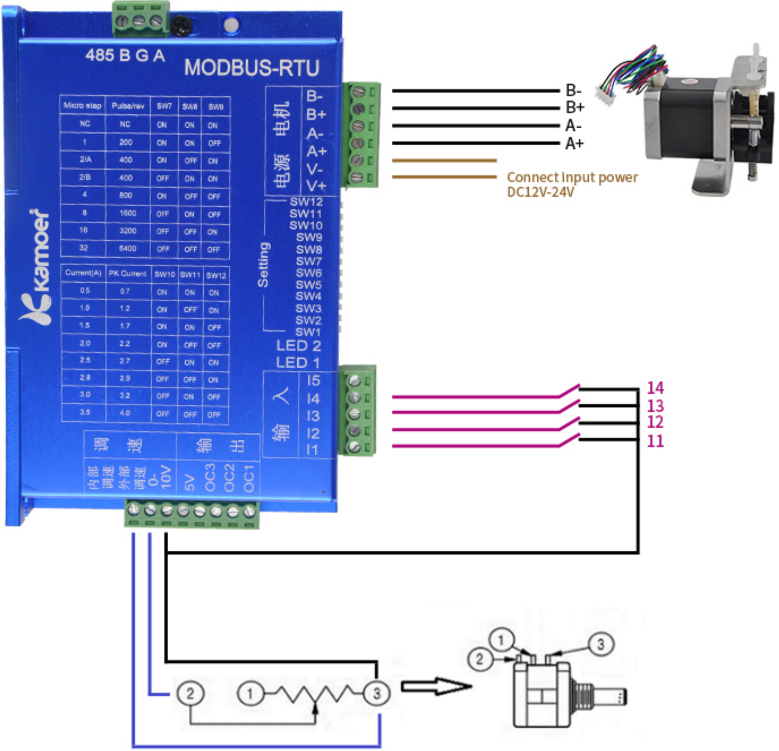
485 B G A
MODBUS-RTU
kamoer
Micro step | Pulse/rev | SW7 | SW8 | SW9
NC | NC | ON | ON | ON
1 | 200 | ON | ON | OFF
2/A | 400 | ON | OFF | ON
2/B | 400 | OFF | ON | ON
4 | 800 | ON | OFF | OFF
8 | 1600 | OFF | ON | OFF
16 | 3200 | OFF | OFF | ON
32 | 6400 | OFF | OFF | OFF
Current(A) | PK Current | SW10 | SW11 | SW12
0.5 | 0.7 | ON | ON | ON
1.0 | 1.2 | ON | OFF | ON
1.5 | 1.7 | ON | ON | OFF
2.0 | 2.2 | ON | OFF | OFF
2.5 | 2.7 | OFF | ON | ON
2.8 | 2.9 | OFF | OFF | ON
3.0 | 3.2 | OFF | ON | OFF
3.5 | 4.0 | OFF | OFF | OFF
电机
电源
B-
B+
A-
A+
V-
V+
Setting
SW12
SW11
SW10
SW9
SW8
SW7
SW6
SW5
SW4
SW3
SW2
SW1
LED 2
LED 1
输入
I5
I4
I3
I2
I1
调速
输出
内部调速
外部调速
0-10V
5V
OC3
OC2
OC1
B-
B+
A-
A+
Connect input power
DC12V-24V
14
13
12
11
②
①
③
①
②
③

Pic4 External speed knob control wiring diagram

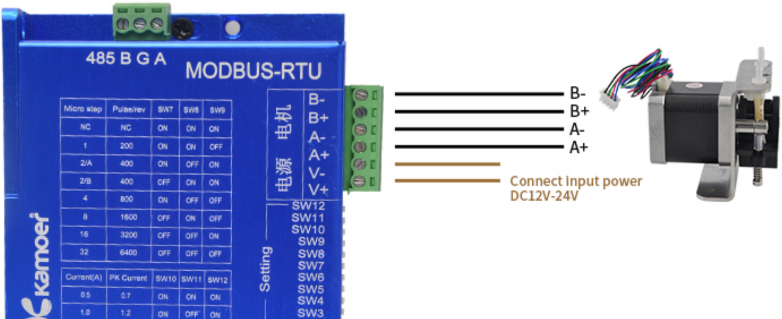
485 B G A
MODBUS-RTU
kamoer
Micro step | Pulse/rev | SW7 | SW8 | SW9
NC | NC | ON | ON | ON
1 | 200 | ON | ON | OFF
2/A | 400 | ON | OFF | ON
2/B | 400 | OFF | ON | ON
4 | 800 | ON | OFF | OFF
8 | 1600 | OFF | ON | OFF
16 | 3200 | OFF | OFF | ON
32 | 6400 | OFF | OFF | OFF
Current(A) | PK Current | SW10 | SW11 | SW12
0.5 | 0.7 | ON | ON | ON
1.0 | 1.2 | ON | OFF | ON
电机
电源
B-
B+
A-
A+
V-
V+
Setting
SW12
SW11
SW10
SW9
SW8
SW7
SW6
SW5
SW4
SW3
B-
B+
A-
A+
Connect input power
DC12V-24V

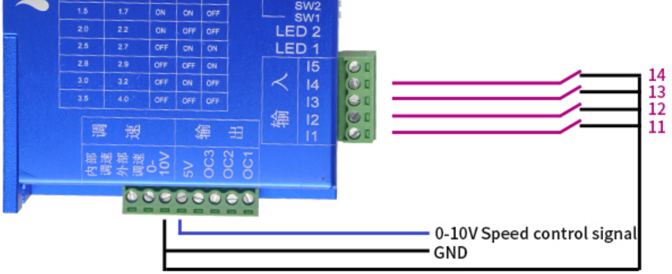
SW2
SW1
LED 2
LED 1
I5
I4
I3
I2
I1
输入
调速
输出
内部调速
外部调速
0-10V
5V
OC3
OC2
OC1
14
13
12
11
0-10V Speed control signal
GND

0-10V control wiring diagram

1.2 DIP switch settings

1.2.1 Control, trigger mode settings

SW1-SW6	Positive and negative control trigger	Positive and negative jogging control
Built-in knob speed	OFF ON OFF ON OFF OFF	OFF ON OFF ON ON OFF
External knob speed	OFF OFF ON ON OFF OFF	OFF OFF ON ON ON OFF
0-10V speed regulation	ON OFF OFF ON OFF OFF	ON OFF OFF ON ON OFF

1.2.2 Segmentation settings

SW7	SW8	SW9	Segmentation
ON	ON	ON	NC
ON	ON	OFF	1
ON	OFF	ON	2
OFF	ON	ON	2
ON	OFF	OFF	4
OFF	ON	OFF	8
OFF	OFF	ON	16
OFF	OFF	OFF	32

1.2.3 Current setting

SW10	SW11	SW12	Current setting
ON	ON	ON	0.5A
ON	OFF	ON	1A
ON	ON	OFF	1.5A
ON	OFF	OFF	2A
OFF	ON	ON	2.5A
OFF	OFF	ON	3A
OFF	ON	OFF	3.5A

1.3 Positive and negative control trigger

❶ Forward operation	❷ Reverse operation	❸ Positive stop	❹ Reverse stop
Trigger I1	Trigger I2	Trigger I3	Trigger I4

1.4 Positive and negative jogging control

❶ Forward operation

Turn on I1 (signal is always valid, release to stop)

❷ Reverse operation

Turn on I2 (signal always valid, release to stop)

二、Peristaltic Pump Driver ---- MODBUS-RTU Communication Control

2.1 Wiring

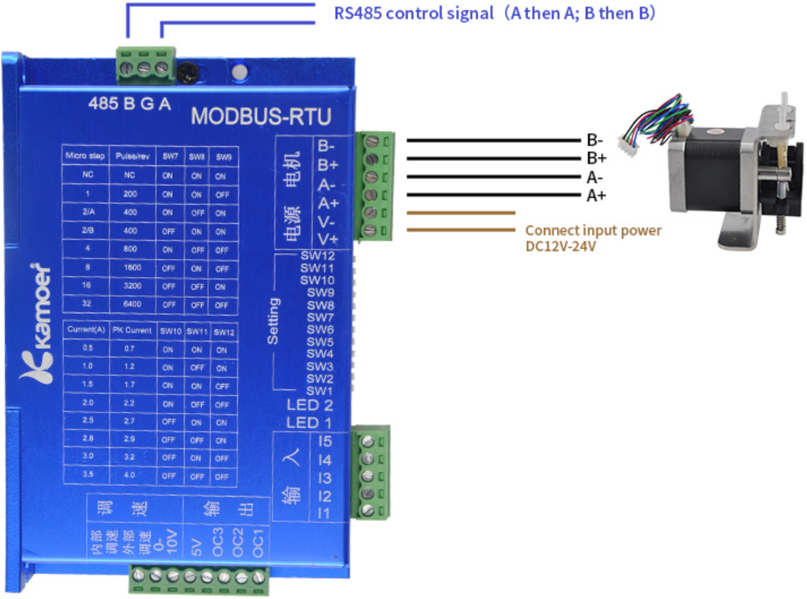
RS485 control signal（A then A; B then B)
485 B G A
MODBUS-RTU
电机
电源
B-
B+
A-
A+
V-
V+
Connect input power DC12V-24V
kamoer
Setting
SW12
SW11
SW10
SW9
SW8
SW7
SW6
SW5
SW4
SW3
SW2
SW1
LED 2
LED 1
输入
I5
I4
I3
I2
I1
调速
内部调速
外部调速
0-10V
输出
5V
OC3
OC2
OC1

Micro step	Pulse/rev	SW7	SW8	SW9
NC	NC	ON	ON	ON
1	200	ON	ON	OFF
2/A	400	ON	OFF	ON
2/B	400	OFF	ON	ON
4	800	ON	OFF	OFF
8	1600	OFF	ON	OFF
16	3200	OFF	OFF	ON
32	6400	OFF	OFF	OFF

Current(A)	PK Current	SW10	SW11	SW12
0.5	0.7	ON	ON	ON
1.0	1.2	ON	OFF	ON
1.5	1.7	ON	ON	OFF
2.0	2.2	ON	OFF	OFF
2.5	2.7	OFF	ON	ON
2.8	2.9	OFF	OFF	ON
3.0	3.2	OFF	ON	OFF
3.5	4.0	OFF	OFF	OFF

RS485 control wiring diagram

2.2 DIP switch settings

❶ Control mode settings

SW1-SW6:OFF OFF OFF OFF OFF ON

❷ Segmentation settings

This operating mode is subdivided by communication settings.
Dialing code does not need to be set.

❸ Current setting

SW10	SW11	SW12	Current setting
ON	ON	ON	0.5A
ON	OFF	ON	1A
ON	ON	OFF	1.5A
ON	OFF	OFF	2A
OFF	ON	ON	2.5A
OFF	OFF	ON	3A
OFF	ON	OFF	3.5A

2.3 Communication parameters

Baud rate: 9600

Data bit: 8

Stop bit: 1

Check: No check

Note: 1. Big-endian mode indicates address and data items; CRC is low-order and high-order.
2.When the RS485 interface is communicating, the response time of each frame cannot be lower than 35ms.

2.4 Communication Protocol

2.4.1 Supported Function Codes:

03H: Read the contents of multiple holding registers.

The function is to read the parameters of the controller and read one or more parameters.

05H: Write a single coil.

The function is to control the command. For example, control positive rotation, control reversal, control stop, etc.

06H: Write a single holding register.

The function is to set a parameter for the controller.

10H: Write multiple holding registers.

The function is to set the parameters of the controller and one or more parameters can be set.

2.4.2 Modbus Address Composition

Type of data	Modbus address	Reading function code	Write function code	Data size
Digital output (coil)	00001——09999	01H	05H，0FH	Bit，1bit
Digital input (contact)	10001——19999	02H		Bit，1bit
Input register	30001——39999	04H		Bit，16bit
Holding register	40001——49999	03H	06H，10H	Bit，16bit

Note:
The modbus address is in the form of 0xxxx, 1xxxx, 3xxxx, 4xxxx decimal.
The address in the communication protocol is in hexadecimal and needs to be converted as follows:
For example, the modbus address 40001 represents the protocol address 0x00, and the 40010 represents the protocol address 0x09.40011 on behalf of the protocol address 0x0a... and so on.

2.4.3 Controller internal parameters

2.4.3.1 Holding register

Register address number	Definition (corresponding parameters)	Reading/writing
40001	Step angle (1.8*100)	R/W
40002	Segmentation (1, 2, 4, 8, 16, 32)	R/W
40003	Starting frequency (unit: HZ)	R/W
40004	Addition and subtraction frequency (unit: HZ)	R/W
40005	Fixed value: 100	R/W
40006	Fixed value: 0	R/W
40007	Fixed value: 0	R/W
40008	Stop mode (0: slow stop 1: stop immediately)	R/W
40009	Speed (unit: rpm)	R/W
40010	Single-step operation n ring low 16 bits (n*100)	R/W

40011	Single-step operation n circle height 16 bits	R/W
	(n*100)	
40012	Direction (0: Forward, 1: Reverse)	R/W
...		
40017	Controller ID number (485 device number)	R/W
...		
40074	The baud rate is low 16 bits	R/W
40075	The baud rate is high 16 bits	R/W

2.4.3.2 Digital Output (Coil) Registers

The coil value field constants indicate the ON/OFF status of the request. Hexadecimal value 0xFF00 request coil is ON; hexadecimal value 0x0000 request coil is OFF. All other values are illegal and have no effect on the coil.

Register address number	Definition (corresponding function)	Instructions
00001	Data storage	Power off save all parameters
...		
00005	Forward	When ON, the motor is always turned OFF and the motor stops.
00006	Reversal	When ON, the motor is always turned OFF and the motor stops
...		
00008	Single step operation (Run once per set single step)	

2.4.4 Communication Examples

2.4.4.1 Reading Step Angles and Subdivisions

The step angle corresponds to register 40001; subdivision corresponds to register 40002.
The address of the protocol converted to hexadecimal corresponds to 00 00 and the number of registers is 2.

Device No. (1 Byte)	Function code (1 Byte)	Data start address (2 Byte)	Reading the number of registers (2 Byte)	CRC check (2 Byte)
01	03	00 00	00 02	C4 0B

Response: Number of bytes = 5+2*N (N is the number of registers read)

Device No. (1 Byte)	Function code (1 Byte)	The number of data bytes (2 Byte)	Data content	CRC check
01	03	04 (N*2)	00 B4 00 08	BB D3

2.4.4.2 Setting the Subdivision Value to 32

Device No. (1 Byte)	Function code (1 Byte)	The number of data bytes (2 Byte)	Data content (2 Byte)	CRC check (2 Byte)
01	06	00 01	00 20	D9 D2

Answer: The same as the sent data.

2.4.4.3 Setting the operating speed

The operating speed occupies 1 register. 250 is converted to hexadecimal 00 FA, and its register address 40009 is converted to hexadecimal protocol address 00 08.

Device No. (1 Byte)	Function code (1 Byte)	Data start address (2 Byte)	Number of registered numbers (2 Byte)	The number of data bytes (1 Byte)	Data content	CRC check (2 Byte)
01	10	00 08	00 01	02	00 FA	27 5B

Response: Number of bytes = 5+2*N (N is the number of registers read)

Device No. (1 Byte)	Function code (1 Byte)	Data start address (2 Byte)	Reading the number of registers (2 Byte)	CRC check (2 Byte)
01	10	00 08	00 01	80 0B

2.4.4.4 Forward Command

The output value is a hexadecimal value FF 00 Request output is ON.
The hexadecimal value 00 00 request output is OFF.
(all other values are illegal and have no effect on the output)
Forward command, corresponding to register 00005, converted to hexadecimal protocol address is 00 04.

Device (1 Byte)	Function code (1 Byte)	Coil address (2 Byte)	Output value (2 Byte)	CRC check (2 Byte)
01	05	00 04	FF 00	CD FB

Answer: The same as the sent data.

2.4.4.5 Forward Stop Command

The output value is a hexadecimal value FF 00 Request output is ON.
The hexadecimal value 00 00 request output is OFF.
(all other values are illegal and have no effect on the output)
Forward command, corresponding to register 00005, converted to hexadecimal protocol address is 00 04.

Device (1 Byte)	Function code (1 Byte)	Coil address (2 Byte)	Output value (2 Byte)	CRC check (2 Byte)
01	05	00 04	00 00	8C 0B

Answer: The same as the sent data.

2.4.4.6 Inversion Command

The output value is a hexadecimal value FF 00 Request output is ON.
The hexadecimal value 00 00 request output is OFF.
(all other values are illegal and have no effect on the output)
Forward command, corresponding to register 00006, is converted into hexadecimal protocol address 00 05.

Device (1 Byte)	Function code (1 Byte)	Coil address (2 Byte)	Output value (2 Byte)	CRC check (2 Byte)
01	05	00 05	FF 00	9C 3B

Answer: The same as the sent data.

2.4.4.7 Reverse Stop Command

The output value is a hexadecimal value FF 00 Request output is ON.
The hexadecimal value 00 00 request output is OFF.
(all other values are illegal and have no effect on the output)
Forward command, corresponding to register 00006, is converted into hexadecimal protocol address 00 05.

Device (1 Byte)	Function code (1 Byte)	Coil address (2 Byte)	Output value (2 Byte)	CRC check (2 Byte)
01	05	00 05	00 00	DD CB

Answer: The same as the sent data.

2.4.4.8 Setting Single Step Run 2 Cycles

The number of single-step runs occupies 2 registers, representing a 32-bit data. 200 (N*100) equals hexadecimal 00 00 00 c8, its register address 40010 corresponds to lower 16-bit data, and 40011 corresponds to high 16-bit data;

Device No. (1 Byte)	Function code (1 Byte)	Data start address (2 Byte)	Number of registered numbers (2 Byte)	The number of data bytes (1 Byte)	Data content	CRC check (2 Byte)
01	10	00 09	00 02	04	00 C8 00 00	B2 3B

Response: Number of bytes =8

Device No. (1 Byte)	Function code (1 Byte)	Data start address (2 Byte)	Reading the number of registers (2 Byte)	CRC check (2 Byte)
01	10	00 09	00 02	91 CA

2.4.4.9 Single Step Command

The output value is a hexadecimal value FF 00 Request output is ON.
The hexadecimal value 00 00 request output is OFF.
(all other values are illegal and have no effect on the output)
Single-step single-run command, corresponding register 00008, converted to hexadecimal protocol address 00 07

Device (1 Byte)	Function code (1 Byte)	Coil address (2 Byte)	Output value (2 Byte)	CRC check (2 Byte)
01	05	00 07	FF 00	3D FB

Answer: The same as the sent data.

Note :
1. Modification of RS485 device address and baud rate modification operation:
The factory default device number is "1". First write the device number using the 06 function code or the 10 function code, and then use the 05 function code to send a data save command, and then power off and restart. (Modified the baud rate, also need to send the save command, then power off and restart.)
2.When reading/writing a 32-bit parameter (that is, occupying 2 registers), the lower 16 bits are in front and the higher 16 bits are later.

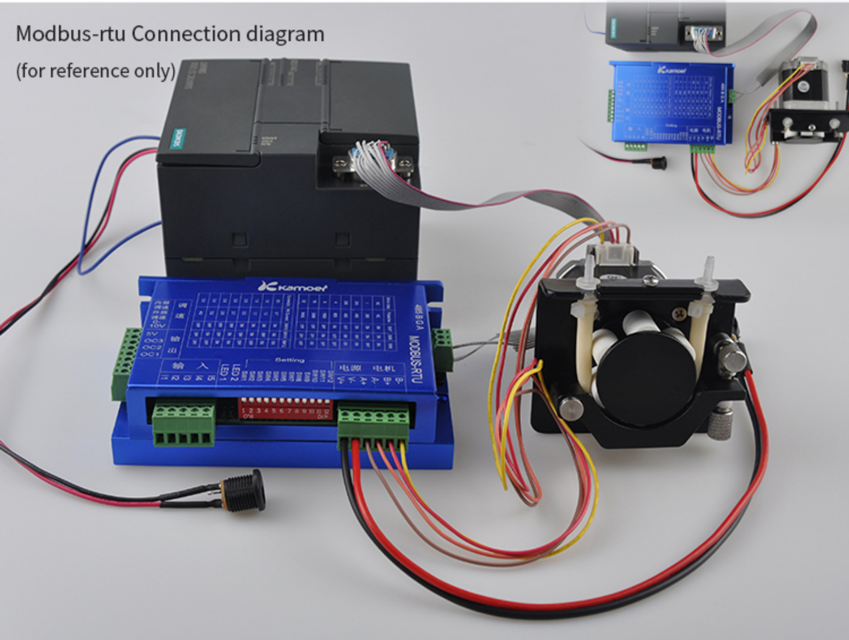

Modbus-rtu Connection diagram
(for reference only)

Kamoer
MODBUS-RTU