FOSHAN SHUNDE SAIER SENSOR CO., LTD.

SEN-HZ06K Series 1

Product Data Sheet

I. Specification (mm)

Model:SEN-HZ06K Series 1
1.Pluse signal output
2. Material: POM
3.Installation: any direction

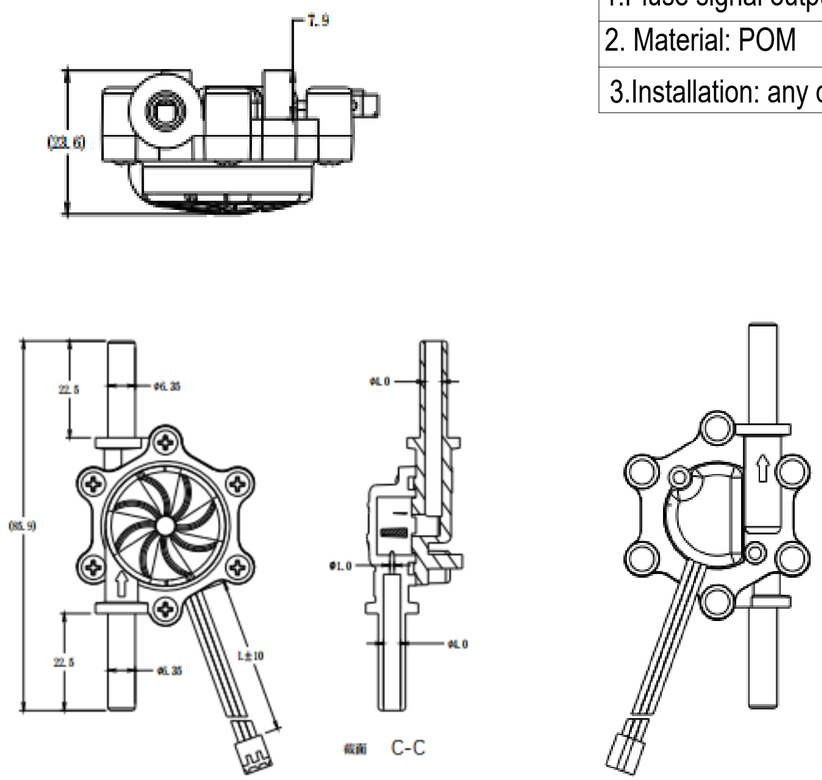

II. Technical parameters:

Temperature	water normal temp. ≤60°C		
Operating voltage range	3V:1.8-5.5V	5V:2.2-18V	24V:4.5-26.4V
Rated voltage/current	DC3V, ≤10μA	DC5V, ≤10mA	DC5V, ≤10mA
Output voltage Duty cycle 50%	rated voltage<DC5V, high level above: Vcc-0.2V, low level below: 0.2V rated voltage≥DC5V, high level above: Vcc-0.5V, low level below: 0.5V		
Insulated resistor	>100 MΩ		
Electrical strength	AC500V, 50Hz		
Flow range	0.15-1.5L/min		
Pressure performance	≤1.2 Mpa		

III. Characteristic for flow range

1. Instant flow Pulse characteristics: F=57*Q±10% (Just for your reference)

Instantaneous Frequency（Hz）- Flow Rate （L/min) Curve Table

Flow rate L/Min（Q）

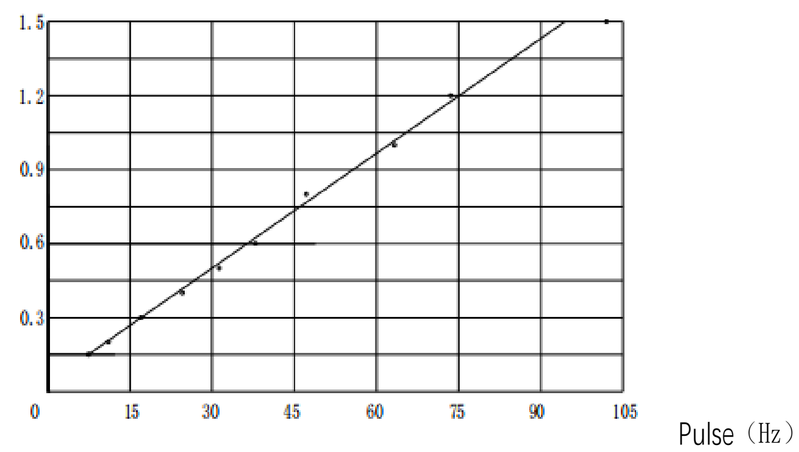

L/min	累积脉冲数/L
0.1L	3042
0.2L	3333
0.3L	3750
0.4L	3963
0.5L	4022
0.6L	4089
0.7L	4160
0.8L	4189
0.9L	4202
1.0L	4242
1.1L	4253

Flow characteristics laboratory measured parameters comparison table

Pulse（Hz）

L/min	0.15L	0.2L	0.3L	0.4L	0.5L	0.6L	0.8L	1.0L	1.2L	1.5L		
Pulse	7.35	10.99	16.95	24.51	31.25	37.88	47.17	63.29	73.53	102		

IV. Instruction:

1.In order to avoid particles, debris into the sensor, the sensor inlet must be installed filter.

2.Water flow sensor installed in the equipment inside or indoors, do not expose for a long time outdoors or high humidity.Under harsh environment such as temperature, to avoid strong vibration and shake the environment, to avoid affecting the sensor measurement Measuring accuracy.

3.When a magnetic material or a material which generates magnetic is close to the sensor, the characteristic may change.

4.Do not open the flow sensor to prevent damage, where unauthorized dismantling of the flow sensor are not in the scope of the warranty.

5.Not used the structure of the sensor for direct replacement may have discomfort, please prompt;

6.Customer service Tel：0757-22905969；Fax no.0757-22905969.

https://www.chnsensor.com；E-mail：sale4@chnnsensor.com.

Remark: Applied to water dispenser, water control machine, coffee machine, water purifier, instrument and meter etc.